Make a difference

DIGITAL MULTIFUNCTION METER

User Manual

MT-DP96HMF

Version 1.0

Thanks for choosing our product – MT-DP96HMF, Please read this manual carefully and pay attention to below caution matters.

CAUTION

- ✓ This product should be installed and maintained by professional person
- ✓ Before operating this product inside or outside, please cut off the input signal and power supply;
- ✓ Please make sure all parts of the product don't have voltage by suitable voltage detection device
- ✓ The power supply should be within the rated range

The below situation will result in device damage and abnormal working

- × Auxilliary power source voltage over range
- × Distribute system frequence over range
- × Current, voltage input polarity incorrect
- × Disconnect the communication plug under charged situation
- × No according requirement to connect termial

Please don't touch the terminals when the meter is in operation!

CONTENTS

1. Function introduce

Measure function		Remark
Realtime measure	Three phase voltage (L-L, L-N)	Basic function/
	Three phase current and neutral current	
	System Frequence	
	P, Q, S, PF (per phase & total	
Electric energry	KWh import	
	KVARh import	
	KWh export, KVARh export	
Harmonics	THDU per phase	
	THDI per phase	
	HDI per phase from 2nd to 31st order	
	HDU per phase from 2nd to 31st order	
Communication	RS485 Port MODBUS-RTU	
Maximum Demand/	U,I,P,Q	Expand option/
Analog output/	0-20mA/ 4-20mA/ 0-5V/ 0-10V	
Digital input/	Dry contact type/	
Relay output/	AC250V 5A Remote/ Alarm	
Display type/		LCD

2. Technical parameter

Parameter			
Signal Input/	Connection system		3P3W/ 3P4W
	Voltage	Measurement range	519V L-L
		Over load	Continous: 1.2 Vn; Instantaneous: 2Vn
		Power consumption	< 1VA
	Current	Measurement range	5A/ 1A
		Over load	Continous: 1.2In; Instantaneous: 2In
		Power consumption	< 1VA
	Frequence		45 - 65Hz
Auxiliary power suply			AC85-265V DC100-300V
Communication			RS485 communication port, physical layer isolation. According international standard MODBUS-RTU agreement. Communication speed 1200-38400 (Default 9600) Test type N81, E81, 081 (Default N81)
Analog output			0-20mA/ 4-20mA/ 0-5V/ 0-10V
Relay output			Programme remote/ Alarm switching ouput Capacity 5A at 250VAC/ 30VDC

Digital input	Remote switch input signal, dry contact input. Program relate alarm output
Measure class	Current, Voltage, Active power, Energy: 0.5S; Reactive power: 1S; Frequency: ±0.1Hz
IP protection	IP53 for indoor type and PI65 for outdoor type
Evernionment	Working temperature: -10÷55°C Store temperature: -20÷75°C Relative Humidity:<80%RH
Safe	Isolation: Signal, auxiliary power suply, output terminal crust resistance >5MΩ and withstand voltage pulse >AC2KV

3. Installation and correction

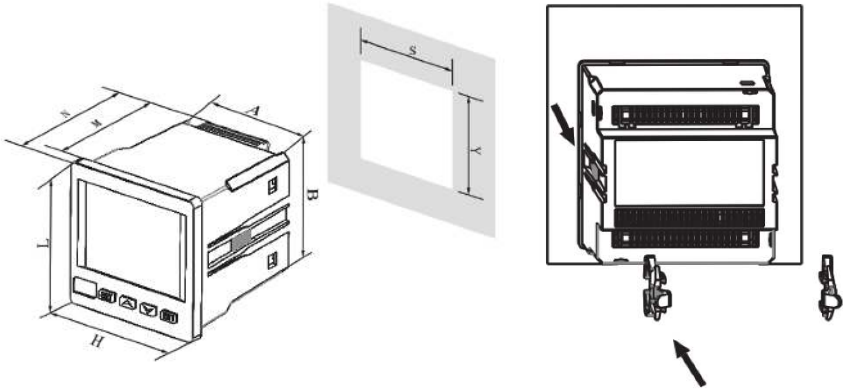

LxH (mm)	AxB (mm)	SxY (mm)	SxY (mm) IP65	N (mm)	M (mm)
96x96	90.5x90.5	91x91	91.5x91.5	94	88

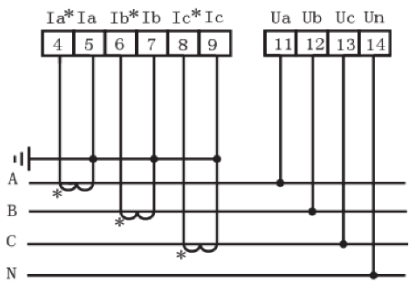

3P4W System: 3PT, Direct Volt input

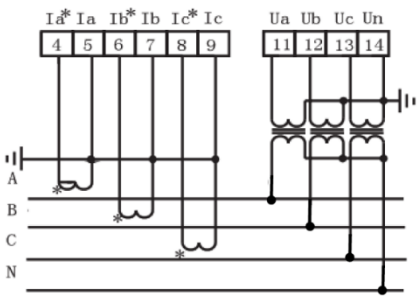

3P4W System: 3PT, 3VT

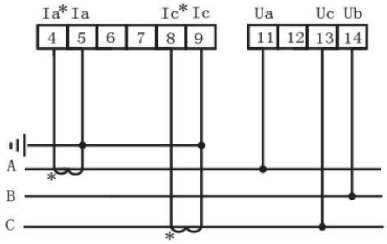

3P3W System: 2PT, Direct Volt input

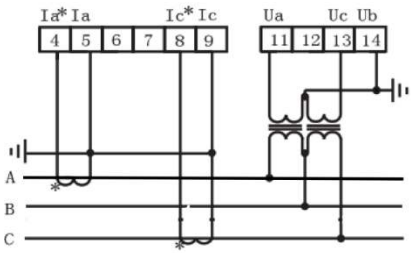

3P3W System: 2PT, 2VT

Active Pulse		Reactive Pulse			RS485			Aux. Power Suply	
Ep-	Ep+	Ep-	Ep+		B	A		N(V-)	L(V+)
48	47	50	49		59	58		2	1

Relay Output								Digital input					Analog output				
DO1		DO2		DO3		DO4		COM	DI1	DI2	DI3	DI4	A0-	A01+	A02+	A03+	A04+
15	16	17	18	19	20	21	22	70	71	72	73	74	30	31	32	33	34

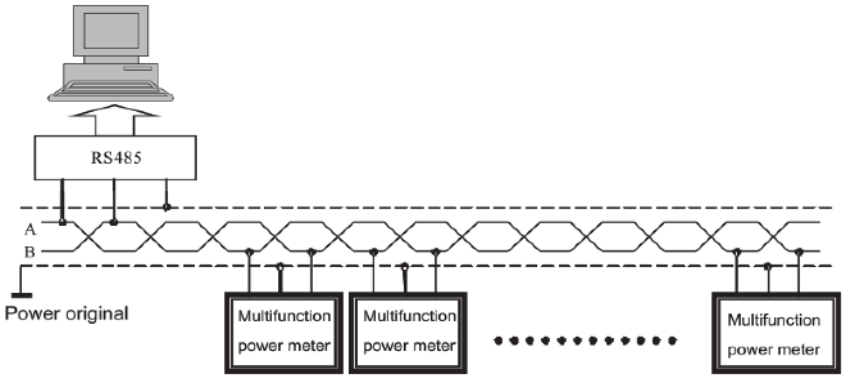

4. Display & Buttons

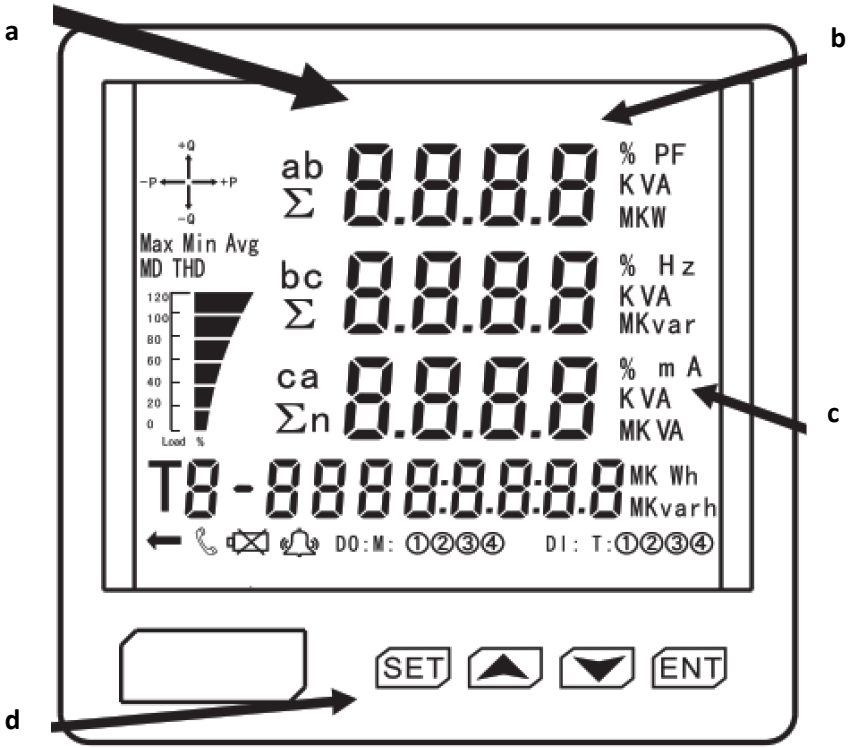

a. Four lines digital display measure information: Three phase voltage, three phase current, active power, reactive power, power factor,frequence, switch input, output, other switch input, two way actice power, two way reactive power, analog input, demand

b. K is light mean practice value is display value is 1.000 times. M is light mean practice value is display value is 1.000.000 times

c. Measure item unit or charactierise: three phase voltage V, three phase current A, active power W, reactive power VAR…

d. Buttons use in change or programme set:


is change page button or value increase or decrease button


is enter programme status


is select confirm button

If there is no relative symbol display or the set data not working, It means the product without the relative function

Board	Content	Explain
DISP=1 -Three phase voltage -Forward active energy Kwh	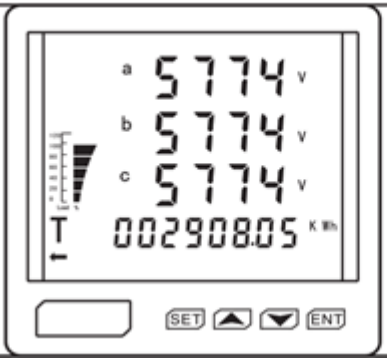	Seperate display voltage Ua, Ub, Uc (in the 3P4W) In left fig. Ua=5774V Ub=5774V Uc=5774V Forward active energy = 2908.05KWh
DISP=2 -Three phase voltage -Reverse active energy Kwh	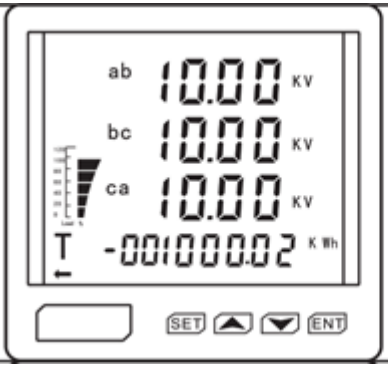	Seperate display voltage Uab, Ubc, Uca (in the 3P4W) In left fig. Uab=10KV Ubc=10KV Uac=10KV Reverse active energy =1000.02Kwh
DISP=3 -Three phase current -Forward reactive energy Kvarh	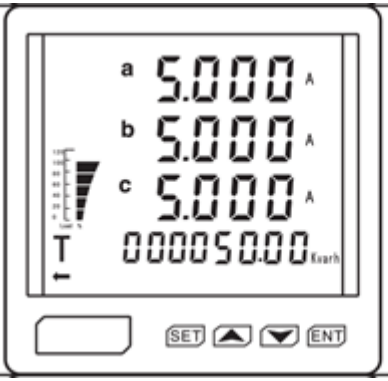	Seperate display current Ia, Ib, Ic (in the 3P4W) In left fig. Ia=5A Ib=5A Ic=5A Reverse reactive energy = 50Kvarh

DISP=4 -Total active power -Total reactive power -Total apparent power		Total active power = 86.6KW Total reactive power = 0000Kvar Total apparent power =86.6KVA Reverse reactive energy =100.08Kvarh

DISP=5 - Active power phase A -Reactive power phase A -Apparent power phase A		Active power of phase A = 28.87KW Reactive power of phase A = 0000Kvar Apparent power of phase A =28.87KVA Forward active energy =2908.05KWh

DISP=6 - Active power phase B -Reactive power phase B -Apparent power phase B		Active power of phase B = 28.87KW Reactive power of phase B = 0000Kvar Apparent power of phase B =28.87KVA Reverse active energy =1000.02KWh

DISP=7 - Active power phase C -Reactive power phase C -Apparent power phase C		Active power of phase C = 28.87KW Reactive power of phase C = 0000Kvar Apparent power of phaseCB =28.87KVA Forward reactive energy =50.00KVARh

DISP=8 - Average current -Zero sequence current	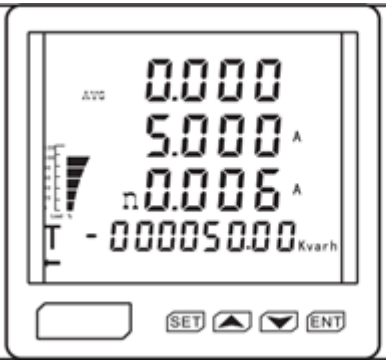	Average current = 5A Zero sequence current = 0.06A Reverse reactive energy =50.00KVARh

DISP=9 - Three phase total power factor -Frequence -Voltage unbalance	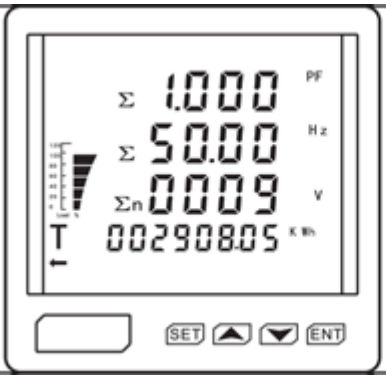	Three phase total power factor =1.000 Frequence = 50Hz Voltage unbalancedness = 9V Forward active energy =2908.05KWh

DISP=10 Split phase power factor		Power factor of phase A =0.999 (inductive load) Power factor of phase B =0.999 (inductive load) Power factor of phase C =0.999 (inductive load) Reverse active energy =1000.02KWh
DISP=11 Total voltage harmonic	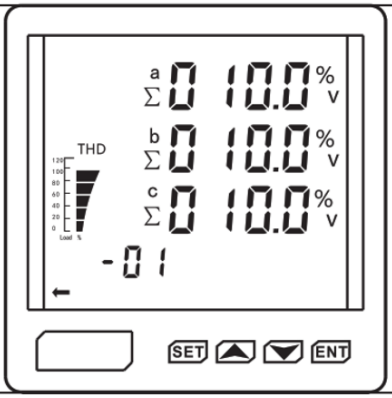	In the left fig: a.b.c phase total voltage harmonic =10%
DISP=12 2nd voltage harmonic	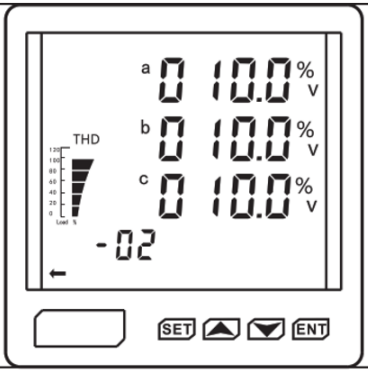	In the left fig: 2nd voltage harmonic of a.b.c phase =10%

Omitted to

Omitted to

Omitted to

DISP = 41 31st voltage harmonic	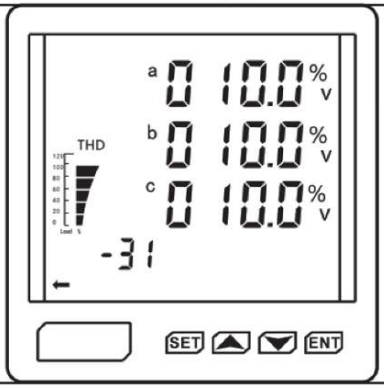	In the left fig: 31st voltage harmonic of a, b, c phase =10%
DISP = 42 Total current harmonic	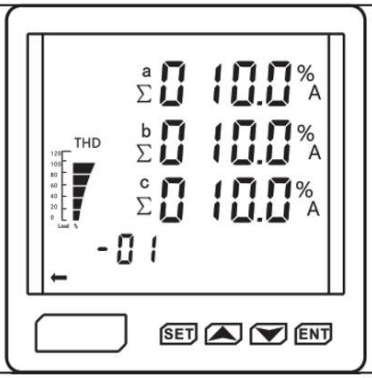	In the left fig: a.b.c phase total current harmonic =10%
DISP = 43 2nd current harmonic	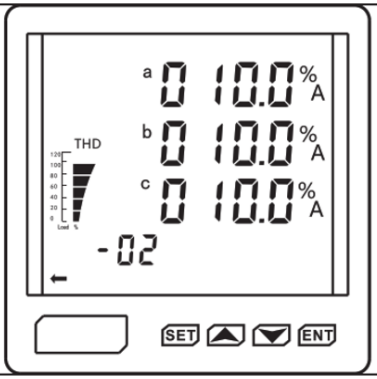	In the left fig: 2nd current harmonic of a, b, c phase =10%

”

Omitted to

Omitted to

Omitted to

DISP=72 31st current harmonic	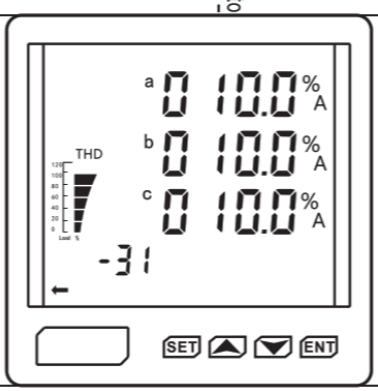	In the left fig: 31st current harmonic of a, b,c phase =10%
DISP=73 Residual current	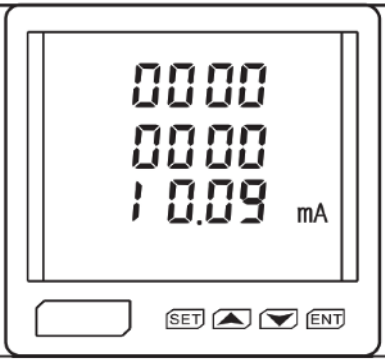	In left fig. display Residual current value: 10.09mA
DISP=74 Digital input infomation from 1 to 12 way channel	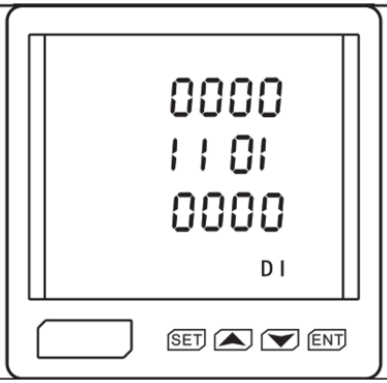	First line: 1-4 way channel Second ine: 5-8 way channel Third line: 9-12 way channel In left fig.: No.5 way, No.6 way, No.8 way chanel are ON,other way chanel is OFF

DISP=75 Digital output infomation from 1 to 4 way channel	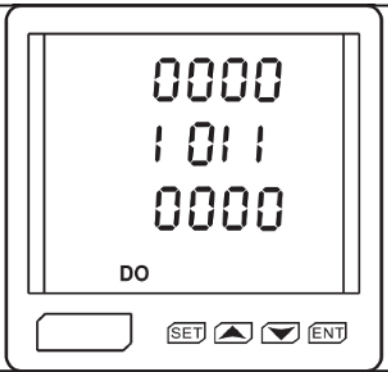	In left fig.: No.1 way, No.3 way, No.4 way chanel are ON, No.2 way chanel is OFF

5. Programme operation

In programme status, digital interface adopt layers structure menu type, meter supply three lines number display (se fig. 5)

Fig.5

No.1 line is first layer menu information;

No.2 line is second layer menu information;

No.3 line is third layer menu information;

Exp: The fig.5 shown: No.1 layer: INPT = Signal input; No.2 layer: CT = current transformer; No.3 layer: current value is 5, It means ratio of CT is 25/5A.

The digital display interface menu has the following organizational structure, the user can choose the appropriate setting parameters according tho the actual situation.

No.1 Layer	No.2 Layer	No.3 Layer	Description
System SET	Display DISP	0000-0017	0000 mean automatic cycling display. Each board connect see table 6
	DISL	0001-0003 or 0000-0120	0000-0120 is keeing time of LCD back light. 0000 means the backlight keeping ON
	Data clear CLr.E	1111	1111 means the data clear other value is invalid

Signal Input INPT	Wiring type Net	0000 or other value	0000 mean 3P4W system. Other value is mean 3P3W system
	Voltage trans. ratio PT	1～9999	PT value= PT primary value/ secondary value
	Current trans. rato PT	1～9999	CT value= CT primary value/ secondary value

Communication Set CONi (i is 1～2)	Address SN	1～247	Meter address range 1 to 247
	Communication speed BAUD	0001～0004	0001 is 1200; 0002 is 2400; 0003 is 4800; 0004 is 9600; 00005 is 9200; 00006 is 38400
	Data format DATA	0001～0003	0000 is E,8, 1; 0001 is 0,8,1; 00002 is N,8,1

Digital output Set DO-i (i is 1～4)	Choose alarm item or close alarm	Set alarm item's specitic threshold value	Choose alarm item, and set relative threshold value (when alarm item is digital value, no need set threshol value), once meet alarm condition, switch ouput working

Analog output Set A0－i （i is 1～4）	Choosen transmitter item or close analog output (refer to 8.2 analog output)	Set the full scale value of analog item	Choose transmitter item's and relative electrical parameter (0-20mA, 4-20mA, 4-12-20mA) For example, set "A0-1" TYPE"0135" UAL"5000", which means A phase current 0-5A corresponds to the transmitter output signal of first loop 4-20mA

Note: The above menu is applied to the product with complete functions. If you find there is no such menu in the product or the menu is not working, It means the product not supporting the function.

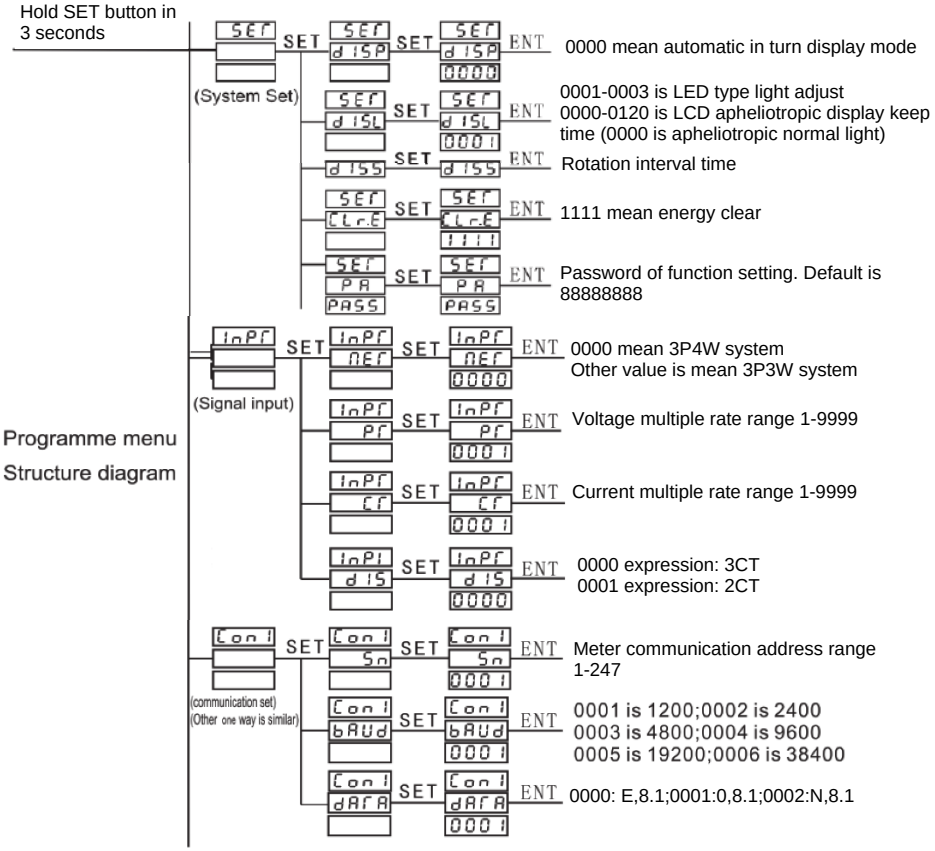

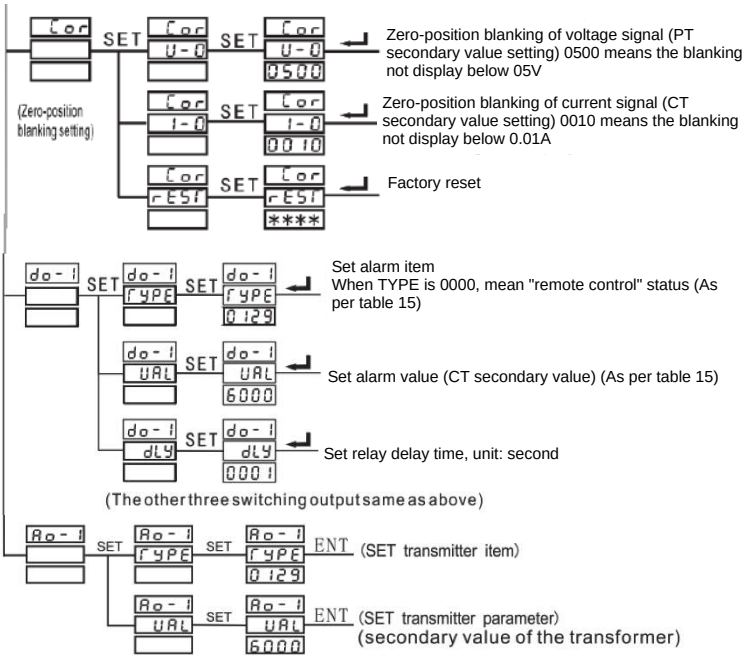

(Analog capacity output: other three ways is similar)